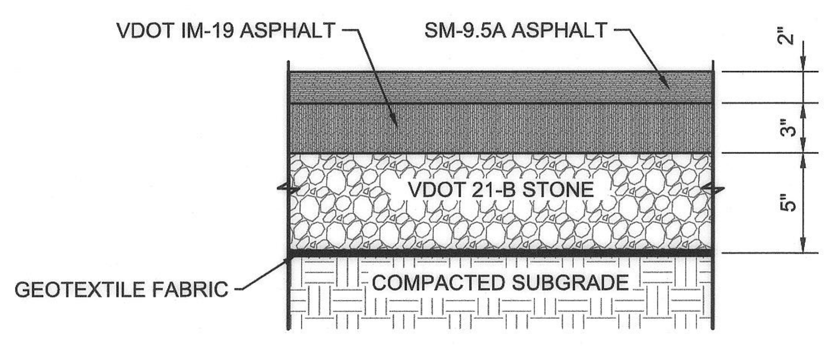

NOTE: MINIMUM PAVEMENT SECTION SHOWN; MATCH EXISTING PAVEMENT SECTION IF GREATER

HEAVY DUTY ASPHALT PAVEMENT DETAIL

NOT TO SCALE

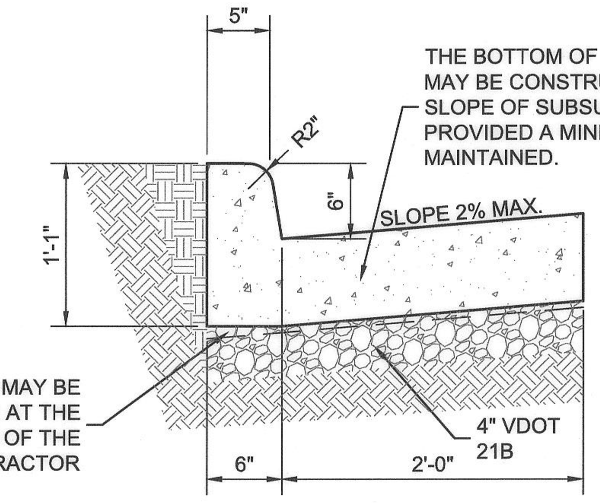

THIS ITEM MAY BE PRECAST OR CAST IN PLACE.

CONCRETE IS TO BE CLASS A3 IF CAST IN PLACE, 4000 PSI IF PRECAST.

THIS CURB IS TO BE USED WHEN DESIGN SPEED IS 40 MPH OR LESS ON RURAL HIGHWAYS AND 45 MPH OR LESS IN DEVELOPED URBAN AND SUBURBAN AREAS.

STANDARD CG-6 CURB AND GUTTER

NOT TO SCALE

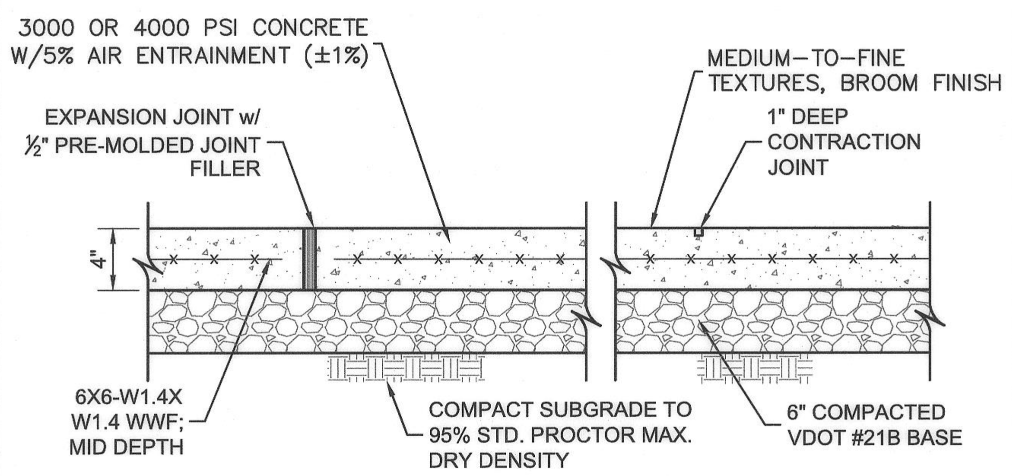

NOTES:
1. INSTALL IN ACCORDANCE WITH SPOT ELEVATIONS WHEN SHOWN ON PLANS. OTHERWISE INSTALL WITH CROSS SLOPE OF 2.0% MAX.
2. RUNNING SLOPE SHALL BE LESS THAN 5.0%
3. TRANSVERSE EXPANSION JOINTS SHALL BE PLACED AT 30'–0" o.c. (MAX)
4. TRANSVERSE CONTROL JOINTS SHALL BE PLACED AT 5'–0" o.c. BETWEEN EXPANSION JOINTS.

CONCRETE SIDEWALK SECTION

NOT TO SCALE

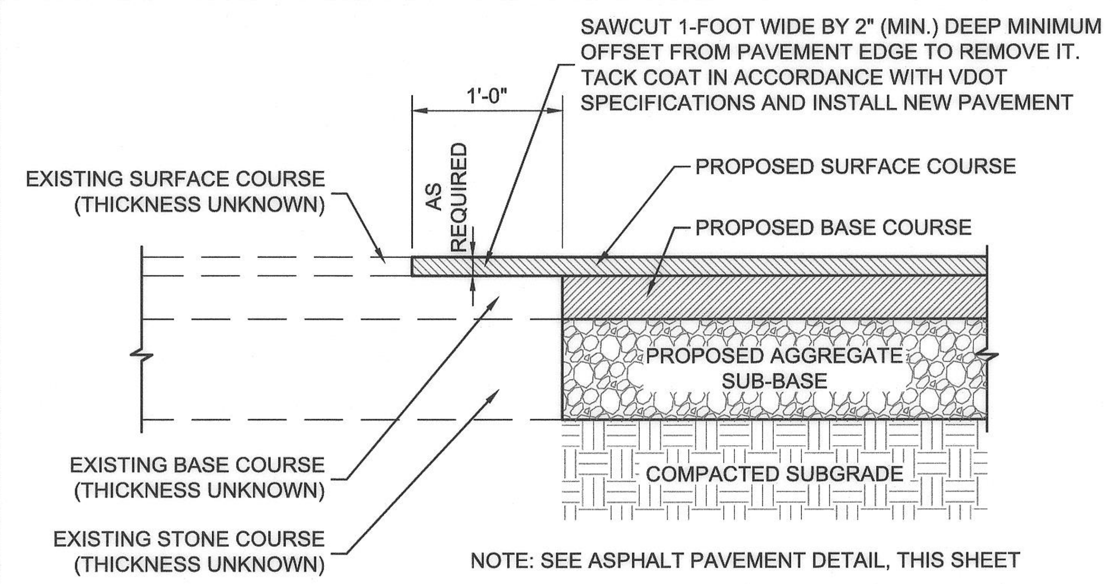

NOTE: SEE ASPHALT PAVEMENT DETAIL, THIS SHEET

PAVEMENT JOINT DETAIL

NOT TO SCALE

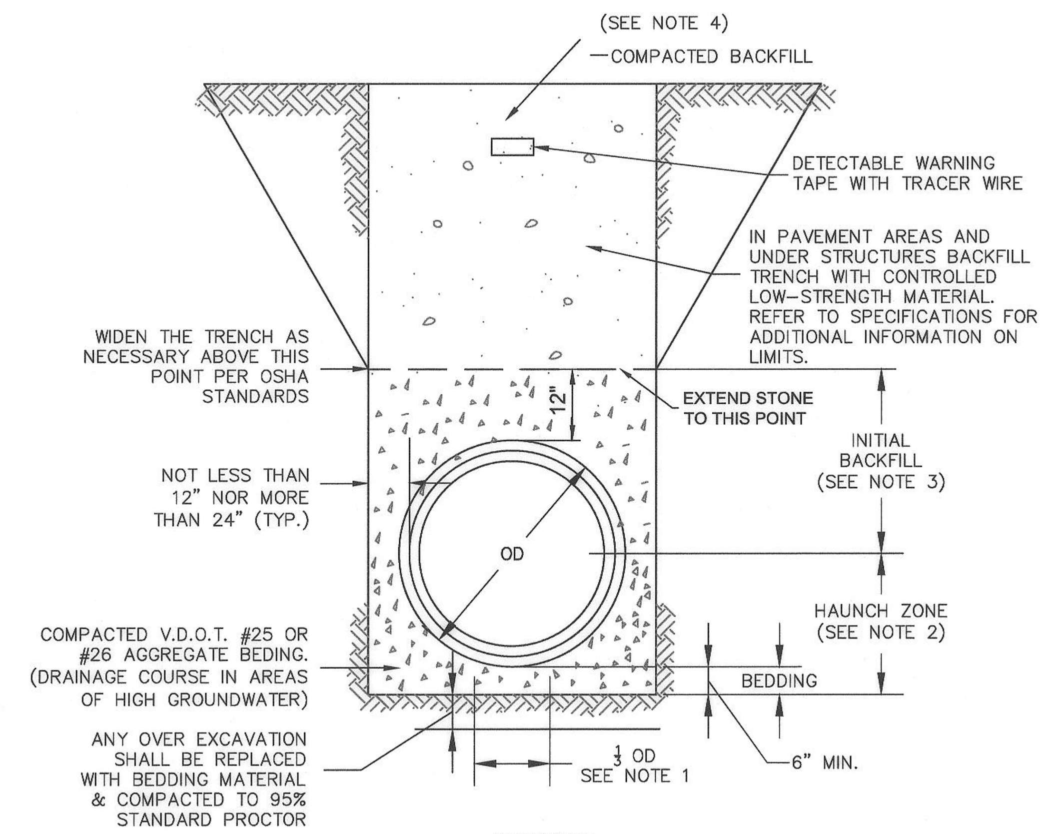

STORM

NOTES:

1. BEDDING FOR A WIDTH OF 1/3 OD UNDER CENTER OF PIPE MAY BE LOOSELY PLACED. ALL OTHER BEDDING SHALL BE COMPACTED % STD. PROCTOR. TO AT LEAST 90

2. MATERIAL IN HAUNCH ZONE SHALL BE PLACED IN 6" LOOSE LAYERS AND COMPACTED TO AT LEAST 90% PROCTOR. WORK IN AND TAMP THE HAUNCHING MATERIAL IN THE AREA BETWEEN THE BEDDING AND UNDERSIDE OF PIPE.

3. INITIAL BACKFILL SHALL BE PLACED IN 6" LOOSE LAYERS AND COMPACTED TO 90% STANDARD PROCTOR.

4. REFER TO SPEC. SECTION 312000 FOR BACKFILL COMPACTION REQUIREMENTS.

5. DO NOT PERMIT COMPACTION EQUIPMENT TO CONTACT PIPE. REMOVE ANY DAMAGED PIPE SECTIONS BEFORE PROCEEDING.

STORM TRENCH BEDDING

NOT TO SCALE

2016 ROAD & BRIDGE STANDARDS

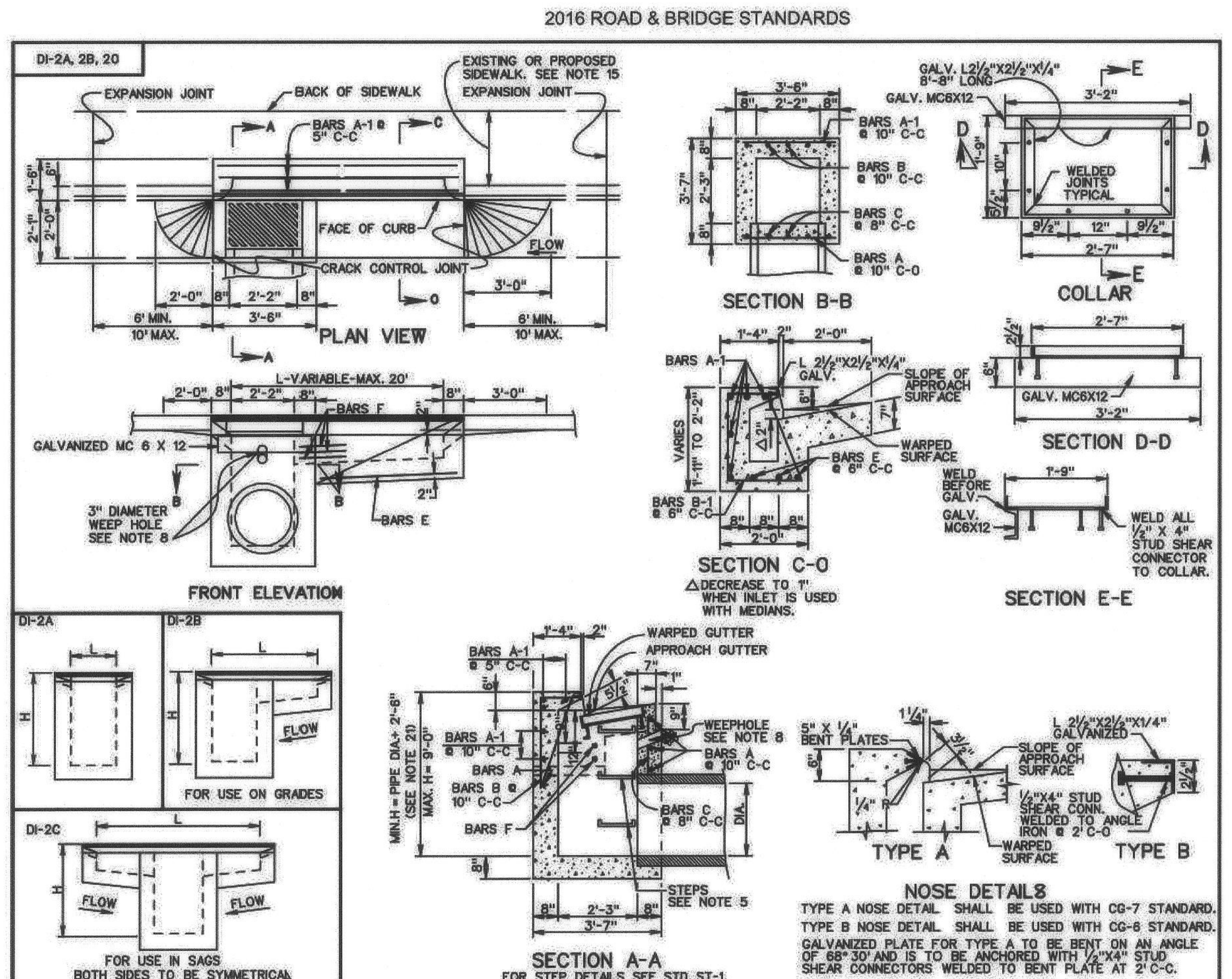

VDOT ROAD AND BRIDGE STANDARDS | SHEET 1 OF 2 | REVISION DATE | 104.05

STANDARD CURB DROP INLET
12" - 24" PIPE: MAXIMUM DEPTH (H) - 9'
VIRGINIA DEPARTMENT OF TRANSPORTATION

SPECIFICATION REFERENCE 233 302

2016 ROAD & BRIDGE STANDARDS

2016 ROAD & BRIDGE STANDARDS

TABLE OF QUANTITIES (DI-2A, 2B, 2C)

REINFORCING STEEL

TYPE	L	CONCRETE	BARS A		BARS A-1		BARS B		BARS B-1		BARS C		BARS E		BARS F		WEIGHT
	Ft.	Cu. Yds.	No.	Lin. Ft.*	No.	Lin. Ft.*	No.	Lin. Ft.*	No.	Lin. Ft.*	No.	Lin. Ft.*	No.	Lin. Ft.*	No.	Lin. Ft.*	Lbs.
DI-2A	2'-2"	1.71	4	3'-2"	5	3'-2"	4	3'-6"	-	–	5	2'-0"	-	-	-	1'-6"	55
DI-2B	4'	1.95	4	3'-2"	5	5'-0"	4	3'-6"	3	4'-3" to 4'-6"	5	2'-0"	3	2'-0"	3	1'-6"	84
	6'	2.23	4	3'-2"	5	7'-0"	4	3'-6"	7	4'-3" to 4'-6"	5	2'-0"	3	4'-0"	3	1'-6"	119
	8'	2.51	4	3'-2"	5	9'-0"	4	3'-6"	11	4'-3" to 4'-6"	5	2'-0"	3	6'-0"	3	1'-6"	154
	10'	2.79	4	3'-2"	5	11'-0"	4	3'-6"	15	4'-3" to 4'-6"	5	2'-0"	3	8'-0"	3	1'-6"	189
	12'	3.05	4	3'-2"	5	13'-0"	4	3'-6"	19	4'-3" to 4'-6"	5	2'-0"	3	10'-0"	3	1'-6"	224
	14'	3.34	4	3'-2"	5	15'-0"	4	3'-6"	23	4'-3" to 4'-6"	5	2'-0"	3	12'-0"	3	1'-6"	259
	16'	3.61	4	3'-2"	5	17'-0"	4	3'-6"	27	4'-3" to 4'-6"	5	2'-0"	3	14'-0"	3	1'-6"	294
	18'	3.89	4	3'-2"	5	19'-0"	4	3'-6"	31	4'-3" to 4'-6"	5	2'-0"	3	16'-0"	3	1'-6"	329
	20'	4.17	4	3'-2"	5	21'-0"	4	3'-6"	35	4'-3" to 4'-6"	5	2'-0"	3	18'-0"	3	1'-6"	364
DI-2C	6'	2.24	4	3'-2"	5	7'-0"	4	3'-6"	6	4'-3" to 4'-6"	5	2'-0"	6	2'-1"	6	1'-6"	115
	8'	2.55	4	3'-2"	5	9'-0"	4	3'-6"	10	4'-3" to 4'-6"	5	2'-0"	6	3'-1"	6	1'-6"	150
	10'	2.82	4	3'-2"	5	11'-0"	4	3'-6"	14	4'-3" to 4'-6"	5	2'-0"	6	4'-1"	6	1'-6"	185
	12'	3.09	4	3'-2"	5	13'-0"	4	3'-6"	18	4'-3" to 4'-6"	5	2'-0"	6	5'-1"	6	1'-6"	220
	14'	3.37	4	3'-2"	5	15'-0"	4	3'-6"	22	4'-3" to 4'-6"	5	2'-0"	6	6'-1"	6	1'-6"	255
	16'	3.65	4	3'-2"	5	17'-0"	4	3'-6"	26	4'-3" to 4'-6"	5	2'-0"	6	7'-1"	6	1'-6"	290
	18'	3.93	4	3'-2"	5	19'-0"	4	3'-6"	30	4'-3" to 4'-6"	5	2'-0"	6	8'-1"	6	1'-6"	325
	20'	4.20	4	3'-2"	5	21'-0"	4	3'-6"	34	4'-3" to 4'-6"	5	2'-0"	6	9'-1"	6	1'-6"	360

NOTES

1. DEPTH OF INLET (H) TO BE SHOWN ON PLANS.
2. THE "H" DIMENSION SHOWN ON THE STANDARDS AND SPECIFIED ON THE PLANS WILL BE MEASURED FROM THE INVERT OF THE OUTFALL PIPE TO THE TOP OF THE STRUCTURE. PLAN "H" DIMENSIONS ARE APPROXIMATE ONLY FOR ESTIMATING PURPOSES AND THE ACTUAL DIMENSIONS SHALL BE DETERMINED BY THE CONTRACTOR FROM FIELD CONDITIONS.
3. WHEN SPECIFIED ON THE PLANS THE INVERT IS TO BE SHAPED IN ACCORDANCE WITH STANDARD IS-1. THE COST OF FURNISHING AND PLACING ALL MATERIALS INCIDENTAL TO THE SHAPING IS TO BE INCLUDED IN THE BID PRICE FOR THE STRUCTURE.
4. IN THE EVENT THE INVERT OF THE OUTFALL PIPE IS HIGHER THAN THE BOTTOM OF THE STRUCTURE, THE INVERT OF THE STRUCTURE SHALL BE SHAPED WITH CEMENT MORTAR TO PREVENT STANDING OR PONDING OF WATER IN THE STRUCTURE. THE COST OF FURNISHING AND PLACING ALL MATERIALS INCIDENTAL TO THE SHAPING IS TO BE INCLUDED IN THE BID PRICE FOR THE STRUCTURE.
5. STEPS ARE TO BE PROVIDED WHEN H IS 4'-0" OR GREATER. FOR DETAILS SEE STANDARD ST-1. THIS ITEM MAY BE PRECAST OR CAST-IN-PLACE.
6. #4 X 8" SMOOTH DOWELS AT APPROXIMATELY 12" C-C TO BE PLACED IN ALL AREAS ADJACENT
7. TO ABUTTING CONCRETE TO PREVENT SETTLEMENT.
8. 3" DIAMETER WEEP HOLE TO BE LOCATED TO DRAIN SUBBASE MATERIAL. WEEP HOLE WITH 12"X12" PLASTIC HARDWARE CLOTH ¼" MESH OR GALVANIZED STEEL WIRE, MINIMUM WIRE DIAMETER 0.03", NUMBER 4 MESH HARDWARE CLOTH ANCHORED FIRMLY TO THE OUTSIDE OF THE STRUCTURE.
9. ALL REINFORCING STEEL SHALL HAVE A MINIMUM COVER OF 2".
10. ALL REINFORCING STEEL TO BE CUT CLEAR OF ALL OPENINGS BY 2".
11. CAST-IN PLACE CONCRETE IS TO BE CLASS A3 (3000 PSI). PRECAST CONCRETE IS TO BE 4000 PSI.
12. LENGTH OF SLOT (L) WILL, IN EVERY CASE, BE SHOWN ON PLANS.
13. THIS STANDARD IS INTENDED FOR USE IN CURB AND GUTTER SITUATIONS ONLY.
14. STANDARD INLETS MAY BE CONSTRUCTED WITH CONCRETE BLOCKS IN ACCORDANCE WITH THE DETAILS SHOWN ON STANDARD DRAWING DI-MB.
15. THIS AREA MAY BE EARTHEN, IN WHICH CASE THE EXPANSION JOINTS WILL APPLY ONLY TO CURB AND GUTTER.
16. CONCRETE QUANTITIES SHOWN ARE FOR DEPTH (H) OF 5'-2" WITHOUT PIPES. THE AMOUNT DISPLACED BY PIPES MUST BE DEDUCTED TO OBTAIN TRU QUANTITIES. FOR INLETS OF DIFFERENT DEPTHS ADD OR SUBTRACT 0.28 CUBIC YARDS OF CONCRETE FOR EACH FOOT.
17. LENGTH OF ANGLE IRON AS SHOWN ON SHEET 1 OF 2 IS TO BE L 16" AT 4.10 LBS./FT.
18. * DENOTES LENGTH OF ONE (1) BAR.
19. ALL REINFORCING BARS TO BE #5.
20. GRATE TO BE INSTALLED SO SLOTS WILL DIRECT WATER TOWARD THE INLET THROAT.
21. MINIMUM HEIGHT = PIPE DIA. + 2'-6" WHEN PIPES ARE LOCATED UNDER EXTENDED SLOT OF INLET.
22. DUMP NO WASTE DRAINS TO WATERWAYS LETTERING IS REQUIRED ON ALL DI-2 GRATES. LOCATION OF LETTERING MAY VARY BY MANUFACTURER.

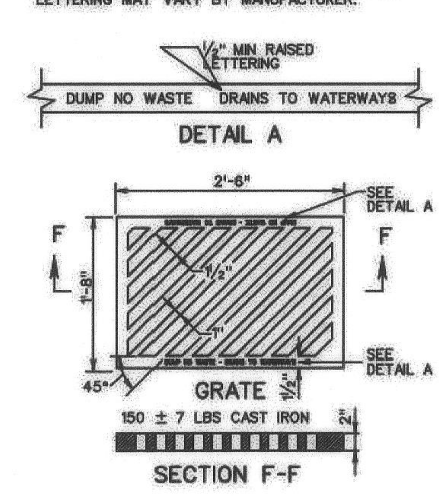

SPECIFICATION REFERENCE 233 302

STANDARD CURB DROP INLET
12" - 24" PIPE: MAXIMUM DEPTH (H)-9'
VIRGINIA DEPARTMENT OF TRANSPORTATION

VDOT ROAD AND BRIDGE STANDARDS | REVISION DATE | SHEET 2 OF 2 | 104.04

2016 ROAD & BRIDGE STANDARDS

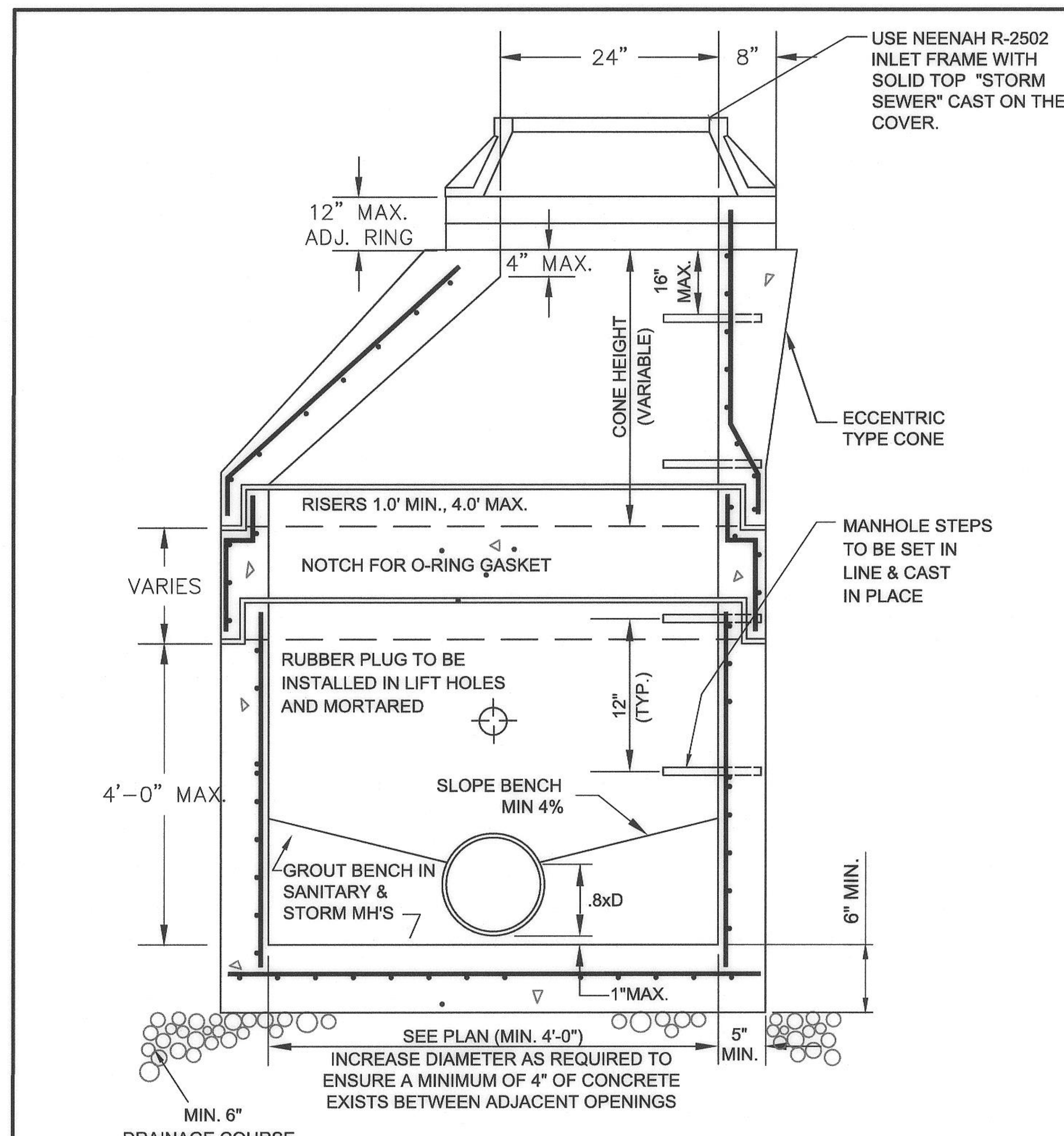

NOTES:

1. MANHOLE TO MEET CURRENT REQUIREMENTS OF ASTM C-478.
2. CONCRETE TO BE 4000 PSI MINIMUM COMPRESSIVE STRENGTH.
3. TAPERED JOINT WITH DOUBLE BUTYL RUBBER SEALANT, ASTM C-990.
4. ALL MANHOLE TO PIPE CONNECTIONS SHALL BE MADE UTILIZING AN A-LOK BOOT CONNECTION, OR APPROVED EQUAL, INSTALLED AT THE FACTORY.
5. DROP MANHOLES REQUIRED FOR SANITARY DROPS 2'-0" OR GREATER.
6. ALL MANHOLES ARE TO BE FURNISHED WITH IS-1 AND ST-1.

PRECAST CONCRETE MANHOLE

NOT TO SCALE

TOWN APPROVAL

6/21/23
TOWN PLANNER — DATE

Kafi Howard 6/21/23
TOWN ~~PLANNER~~ ENGINEER — DATE

COMMONWEALTH OF VIRGINIA
Andrew J. Hemmen
Lic. No. 0402060905
10/04/2022
PROFESSIONAL ENGINEER

Draper Aden Associates
Engineering • Surveying • Environmental Services
1030 Wilmer Avenue, Suite 100
Richmond, VA 23227
804-264-2228 Fax: 804-264-8773
www.daa.com
• Blacksburg, VA • Charlottesville, VA • Hampton Roads, VA
• Raleigh, NC • Fayetteville, NC • Northern Virginia • Virginia Beach, VA

SITE AND UTILITY DETAILS

PATRICK HENRY DRIVE BUS STOP

PRICES FORK MAG. DISTRICT,BLACKSBURG, MONTGOMERY COUNTY, VIRGINIA

REVISIONS

DESIGNED BY:	AJH
DRAWN BY:	MJR
CHECKED BY:	GAH
SCALE:	NO SCALE
DATE:	10/04/2022
PROJECT NUMBER:	2102060

C502

L-2045

P:\2021\02000\2102060\03-SD\CAD\2102060 – DSN\2102060- SITE DETAILS.dwg October 5, 2022 7:18:24 AM